Example 0.1. Here are three equivalent SNST with their external V- and W-arcs drawn.

$$\begin{array}{ccc} \begin{array}{|c|c|c|} \hline 1 & 3 & 1 \\ \hline 2 & 2 \\ \cline{1-2} 4 \\ \cline{1-1} \end{array} & \begin{array}{|c|c|c|} \hline 1 & 2 & 1 \\ \hline 2 & 3 \\ \cline{1-2} 4 \\ \cline{1-1} \end{array} & -\begin{array}{|c|c|c|} \hline 2 & 1 & 1 \\ \hline 3 & 2 \\ \cline{1-2} 4 \\ \cline{1-1} \end{array} \\ T_1 & T_2 & T_3 \end{array}$$

There is one 3-2-1 W-arc in T_1, T_2, T_3, and there are no pure k-l V- or W-arcs in T_1, T_2, or T_3.

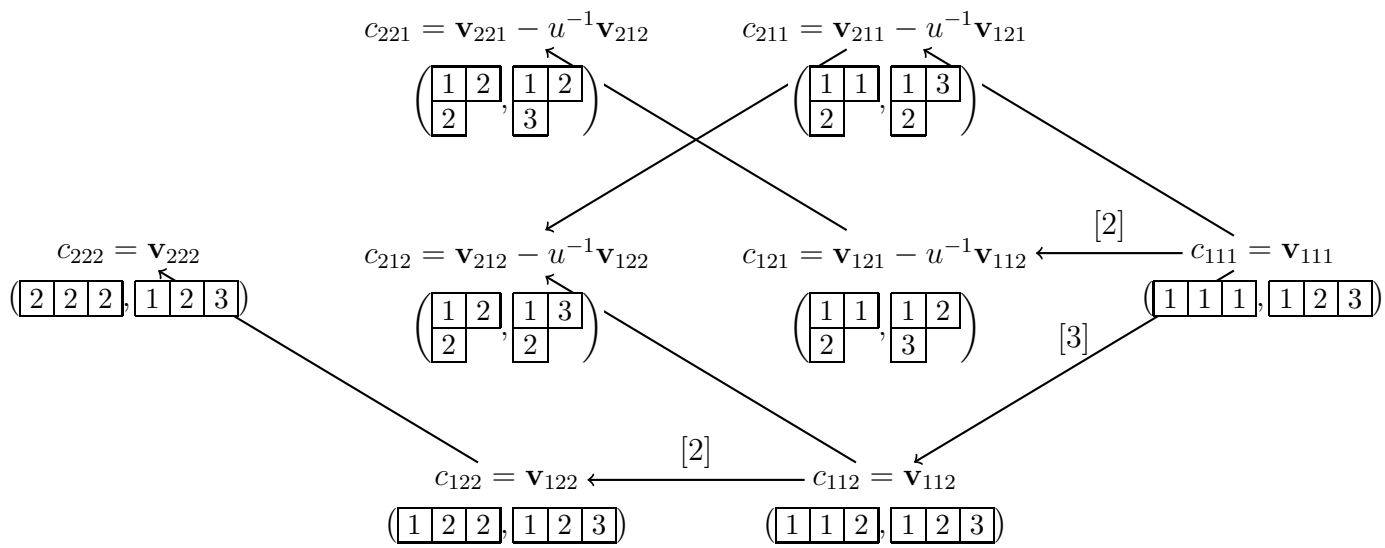

Figure 1: The upper canonical basis of $V^{\otimes 3}$ for $d_V = 2$. The pairs of tableaux are of the form $(P(\mathbf{k}), Q(\mathbf{k}))$. The arrows and their coefficients give the action of F on the upper canonical basis.

$$\boxed{1} = c_{\substack{1\\1}} \qquad \boxed{2} = c_{\substack{1\\2}} \qquad \boxed{3} = c_{\substack{2\\1}} \qquad \boxed{4} = c_{\substack{2\\2}}$$

$$\boxed{\begin{matrix}1\\2\end{matrix}} = c_{\substack{11\\21}} \qquad \boxed{\begin{matrix}1\\3\end{matrix}} = c_{\substack{21\\11}} \qquad \boxed{\begin{matrix}3\\2\end{matrix}} = c_{\substack{12\\21}} + \tfrac{1}{[2]} c_{\substack{21\\21}} \qquad \boxed{\begin{matrix}2\\3\end{matrix}} = c_{\substack{21\\12}} + \tfrac{1}{[2]} c_{\substack{21\\21}} \qquad \boxed{\begin{matrix}3\\4\end{matrix}} = c_{\substack{22\\21}} \qquad \boxed{\begin{matrix}2\\4\end{matrix}} = c_{\substack{21\\22}}$$

$$\boxed{\begin{matrix}1\\2\\3\end{matrix}} = c_{\substack{211\\121}} - c_{\substack{121\\211}} \qquad \boxed{\begin{matrix}1\\2\\4\end{matrix}} = c_{\substack{211\\221}} - c_{\substack{121\\212}} \qquad \boxed{\begin{matrix}1\\3\\4\end{matrix}} = c_{\substack{212\\121}} - c_{\substack{221\\211}} \qquad \boxed{\begin{matrix}2\\3\\4\end{matrix}} = c_{\substack{212\\221}} - c_{\substack{221\\212}}$$

$$\boxed{\begin{matrix}1\\2\\3\\4\end{matrix}} = c_{\substack{2121\\2211}} - c_{\substack{2211\\2121}}$$

Figure 2: Nonstandard columns of height r are identified with NSC^r. These are a basis of $\Lambda^r \bar{X}$.

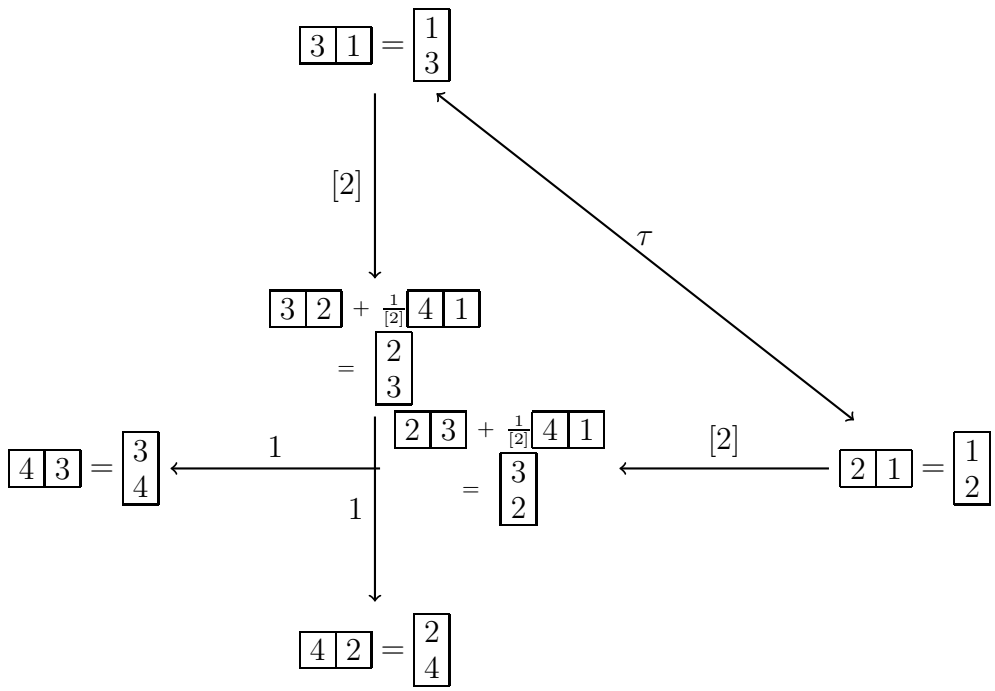

Figure 3: The basis $\mathrm{NST}(\triangleright(1,1))$ of $\bar{Y}_{\triangleright(1,1)}$, which consists of graded and non-integral $\triangleright$NST.

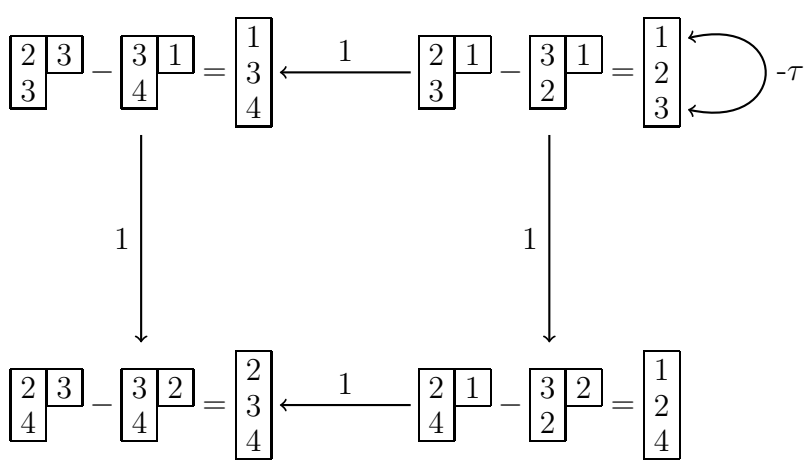

Figure 4: The basis $\mathrm{NST}(\triangleright(2,1))$ of $\bar{Y}_{\triangleright(2,1)}$, which consists of degree-preserving and integral $\triangleright$NST.

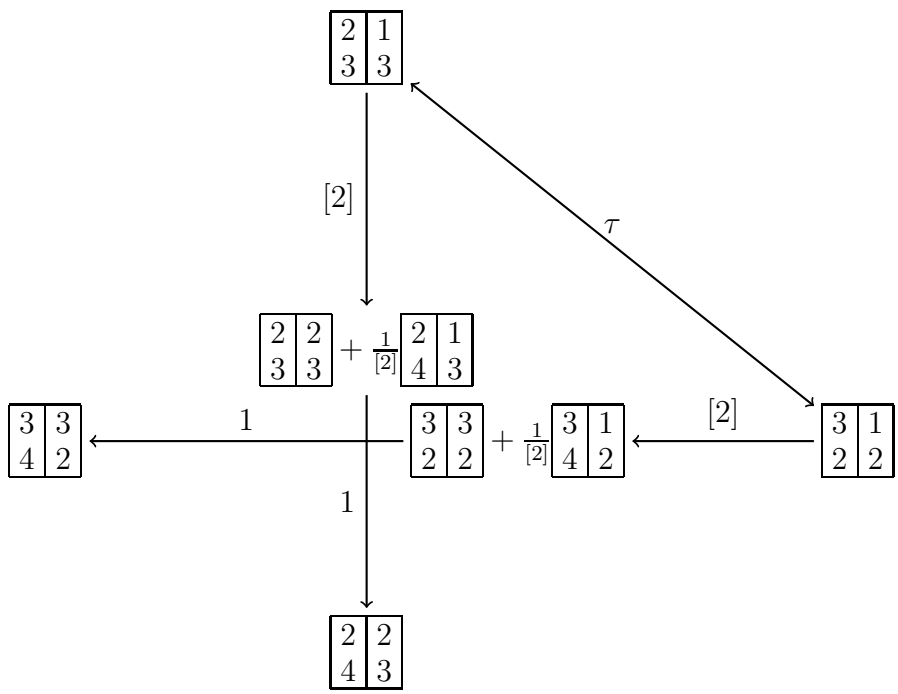

Figure 5: The graded elements of the basis $\mathrm{NST}(\triangleright(2,2))$ of $\bar{Y}_{\triangleright(2,2)}$, which are all non-integral.

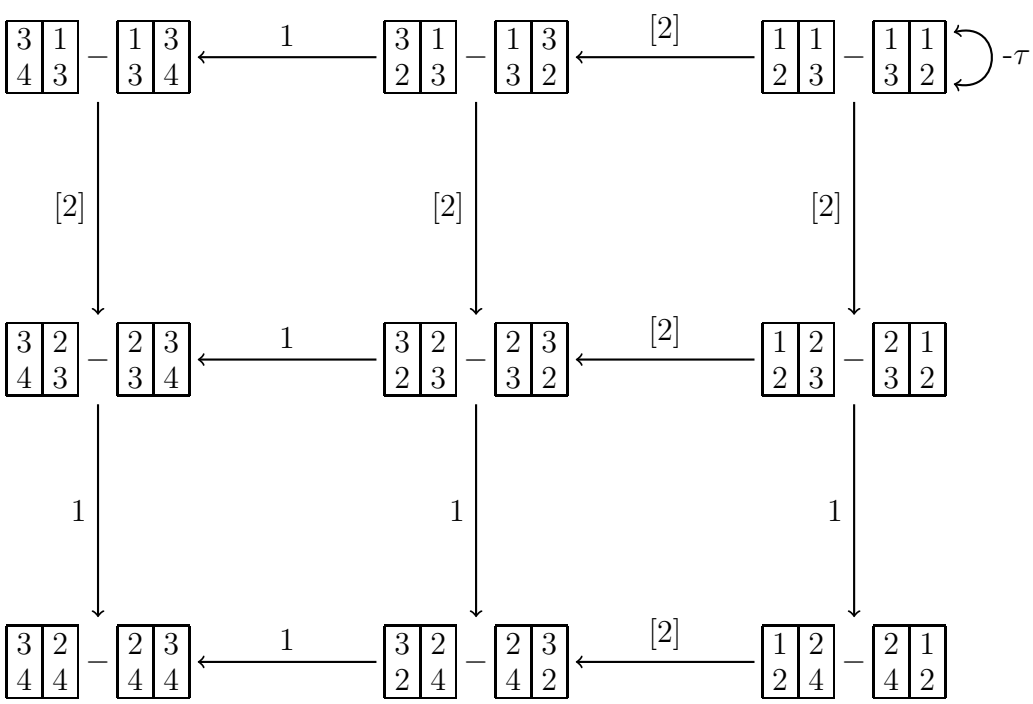

Figure 6: Some of the degree-preserving elements of the basis $\mathrm{NST}(\triangleright(2,2))$ of $\bar{Y}_{\triangleright(2,2)}$, which are all integral.

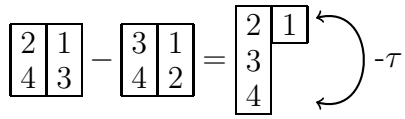

Figure 7: A degree-preserving and integral element of the basis $\mathrm{NST}(\triangleright(2,2))$ of $\bar{Y}_{\triangleright(2,2)}$.

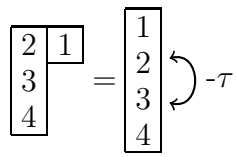

Figure 8: The element of the basis $\mathrm{NST}(\triangleright(3,1))$ of $\bar{Y}_{\triangleright(3,1)}$, which is graded and integral.

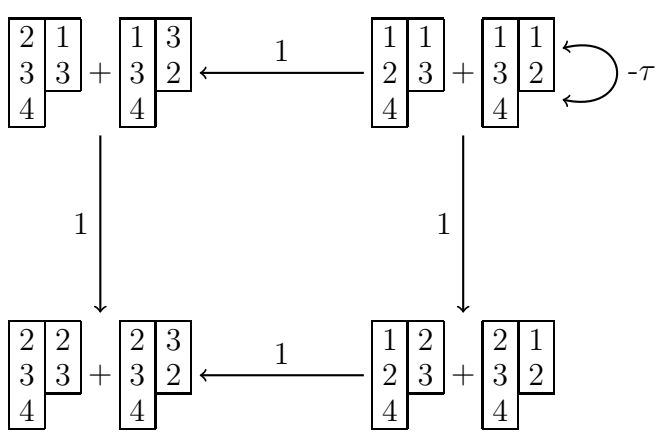

Figure 9: The basis $\mathrm{NST}(\triangleright(3,2))$ of $\bar{Y}_{\triangleright(3,2)}$, which consists of degree-preserving and integral $\triangleright$NST.

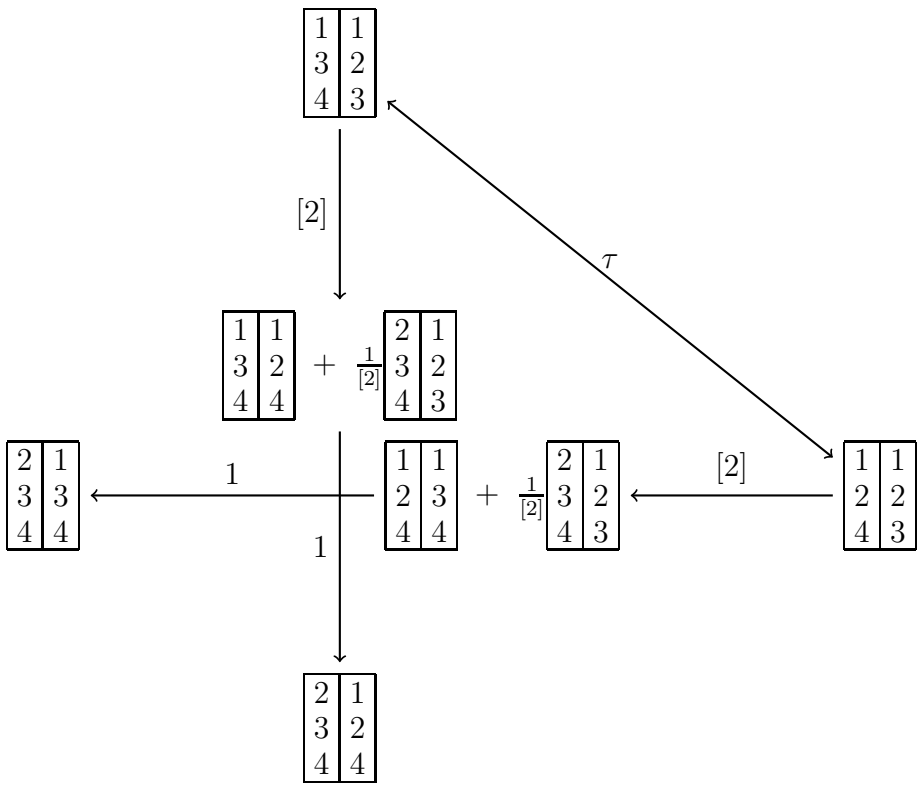

Figure 10: The basis NST($\triangleright(3,3)$) of $\bar{Y}_{\triangleright(3,3)}$, which consists of graded and non-integral $\triangleright$NST.

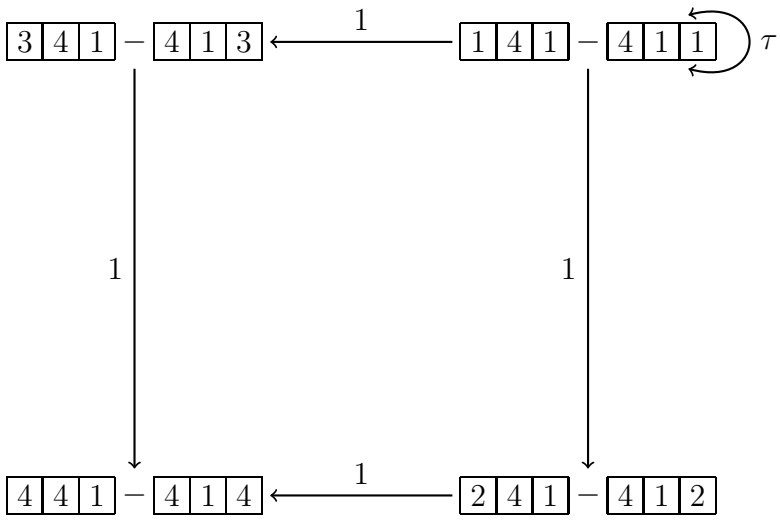

Figure 11: The elements of $\mathrm{NST}(\triangleright(1,1,1))$, which span a $\bar{U}_\tau$-submodule of $\bar{Y}_{\triangleright(1,1,1)}$ and are all degree-preserving and integral. This shows that height-1 invariants commute with height-1 columns in $\bar{X}_{(1,1,1)}$.

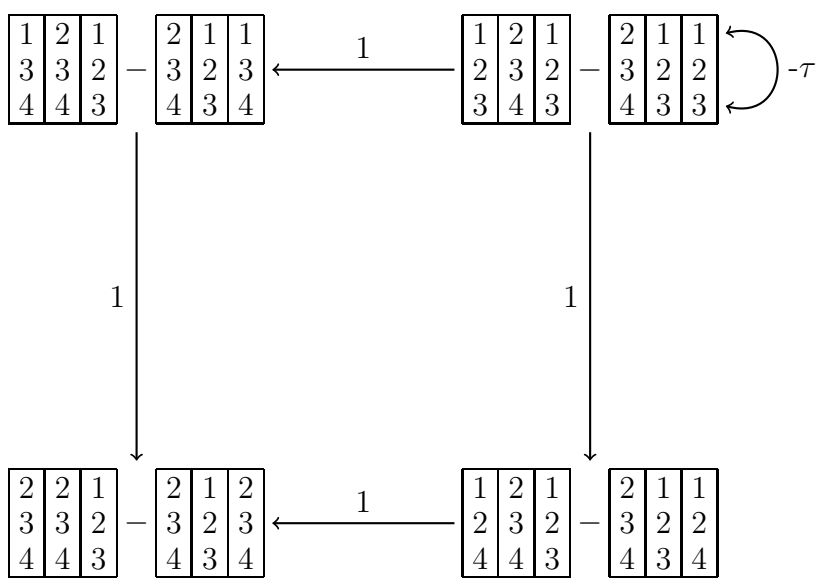

Figure 12: The elements of $\mathrm{NST}(\triangleright(3,3,3))$, which span a $\bar{U}_\tau$-submodule of $\bar{Y}_{\triangleright(3,3,3)}$ and are all degree-preserving and integral. This shows that height-3 invariants commute with height-3 columns in $\bar{X}_{(3,3,3)}$.

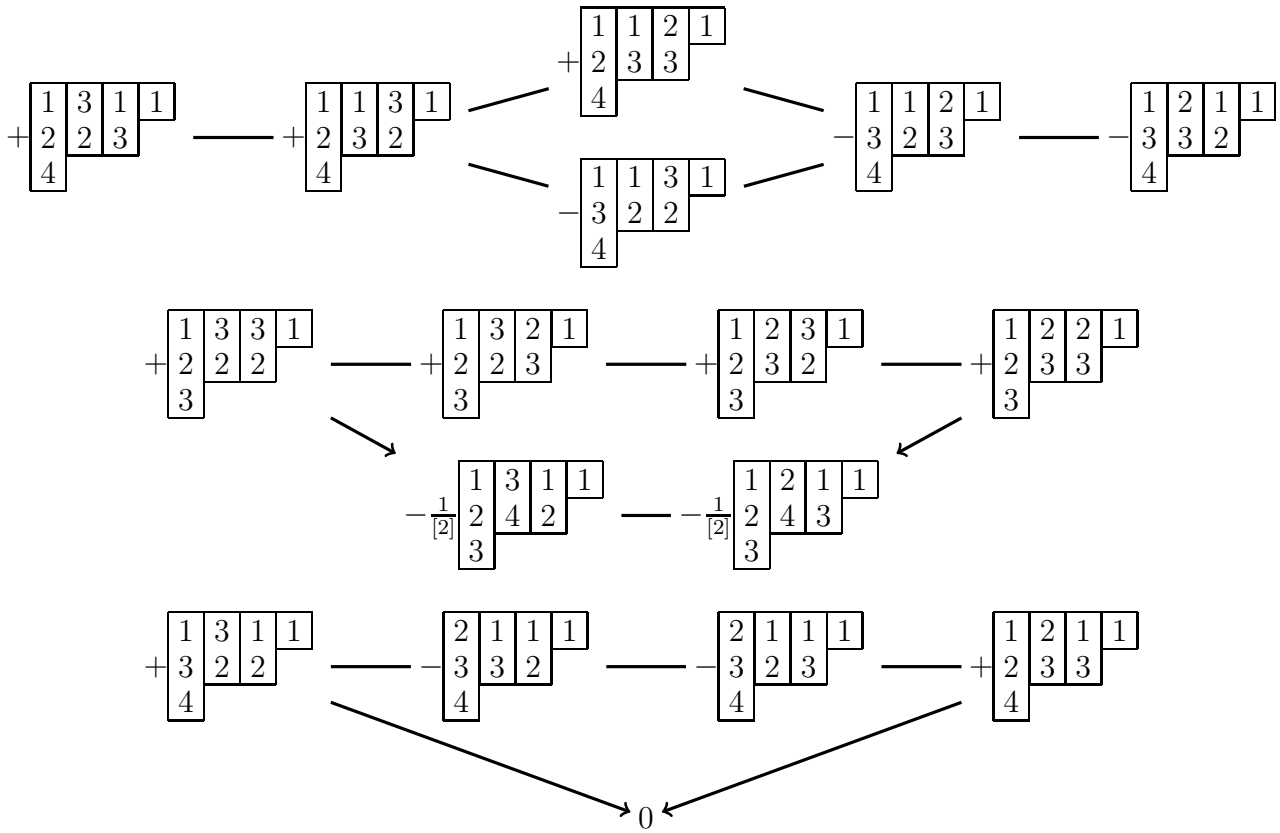

Figure 13: The graph $\mathcal{TG}((3,2,2,1)')$ restricted to highest weight SNST of weight $((5,3),(5,3))$. Also, for each pair $\{T,-T\}$ of SNST, we have only drawn one of the pair. Edges without arrows indicate a directed edge in both directions and are degree-preserving moves; edges with arrows are graded moves. There are two strong components that are nonzero NSTC–the one of size 6 and the one of size 2, corresponding to the fact that the Kronecker coefficient $g_{(5,3),(5,3),(3,2,2,1)'} = 2$.

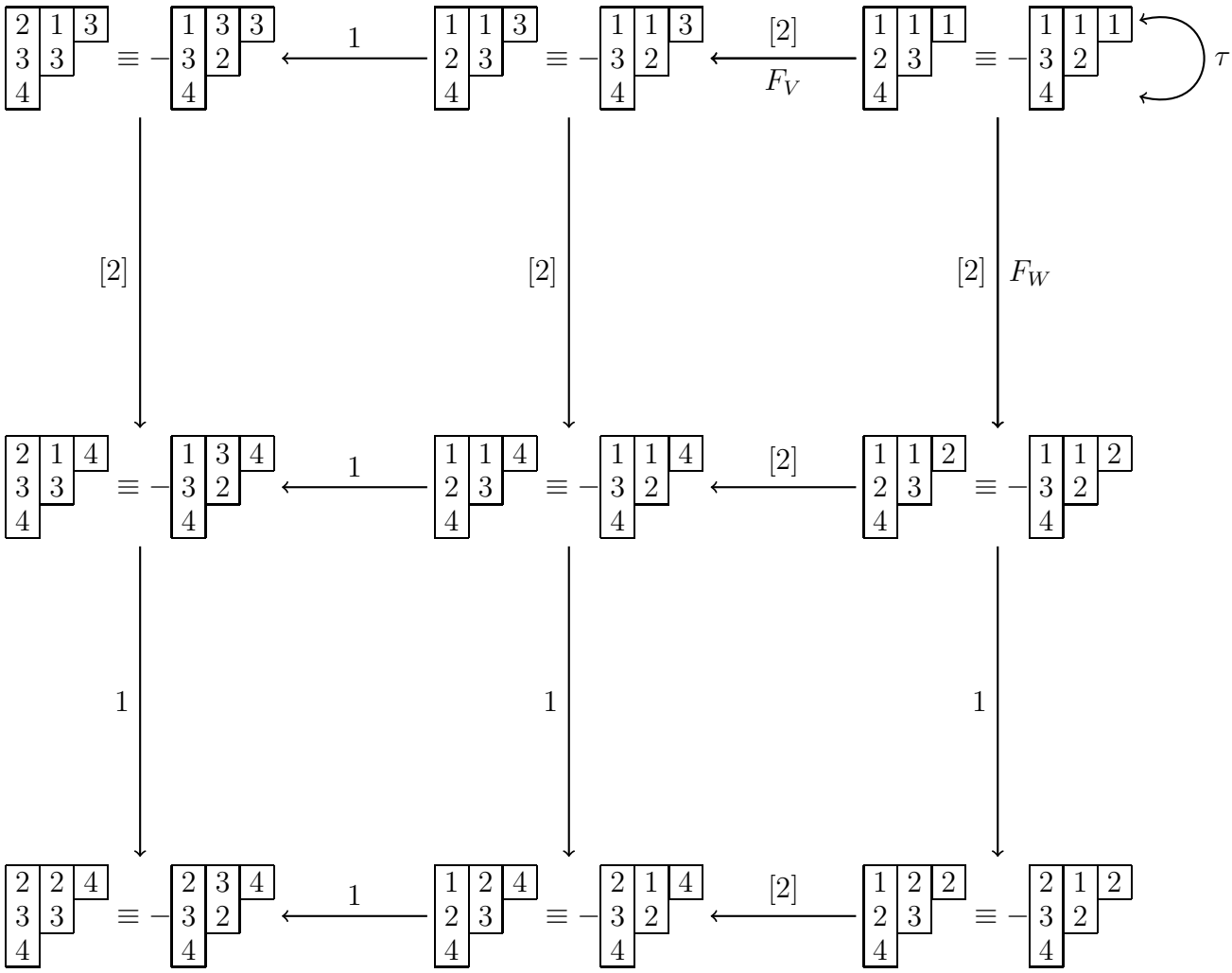

Figure 14: A $\bar{U}_\tau$-cell of +NSTC$((3,2,1))$; all SNST belonging to each +NSTC in this cell are shown.

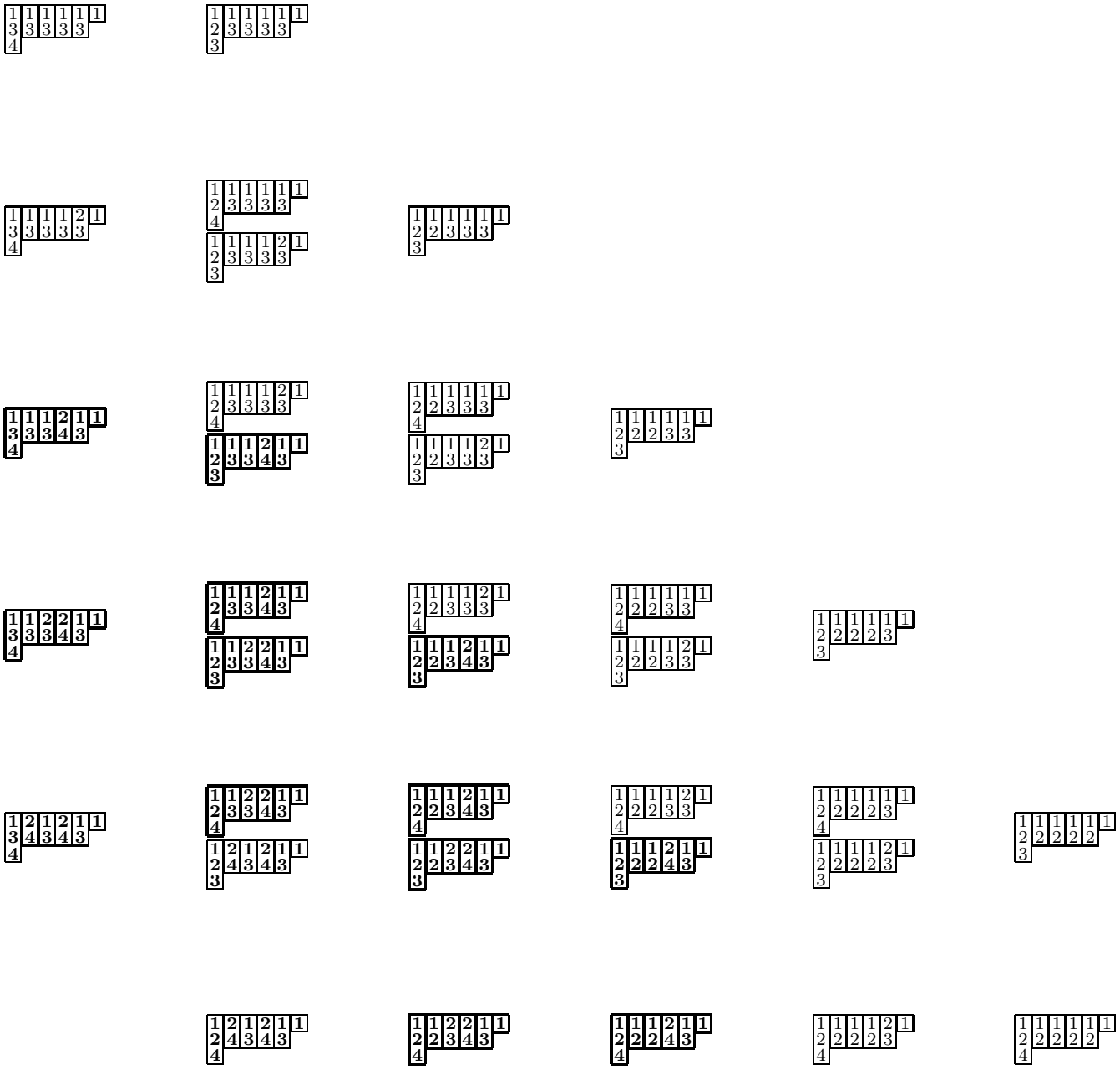

Figure 15: Straightened highest weight NST of shape $(3, 2, 2, 2, 2, 1)$. The position of an NST of weight $(\lambda, \mu) = ([l_2, l_1], [m_2, m_1])$ is (l_1, m_1). The bold borders and numbers make it easier to read off the NST of fixed degree.

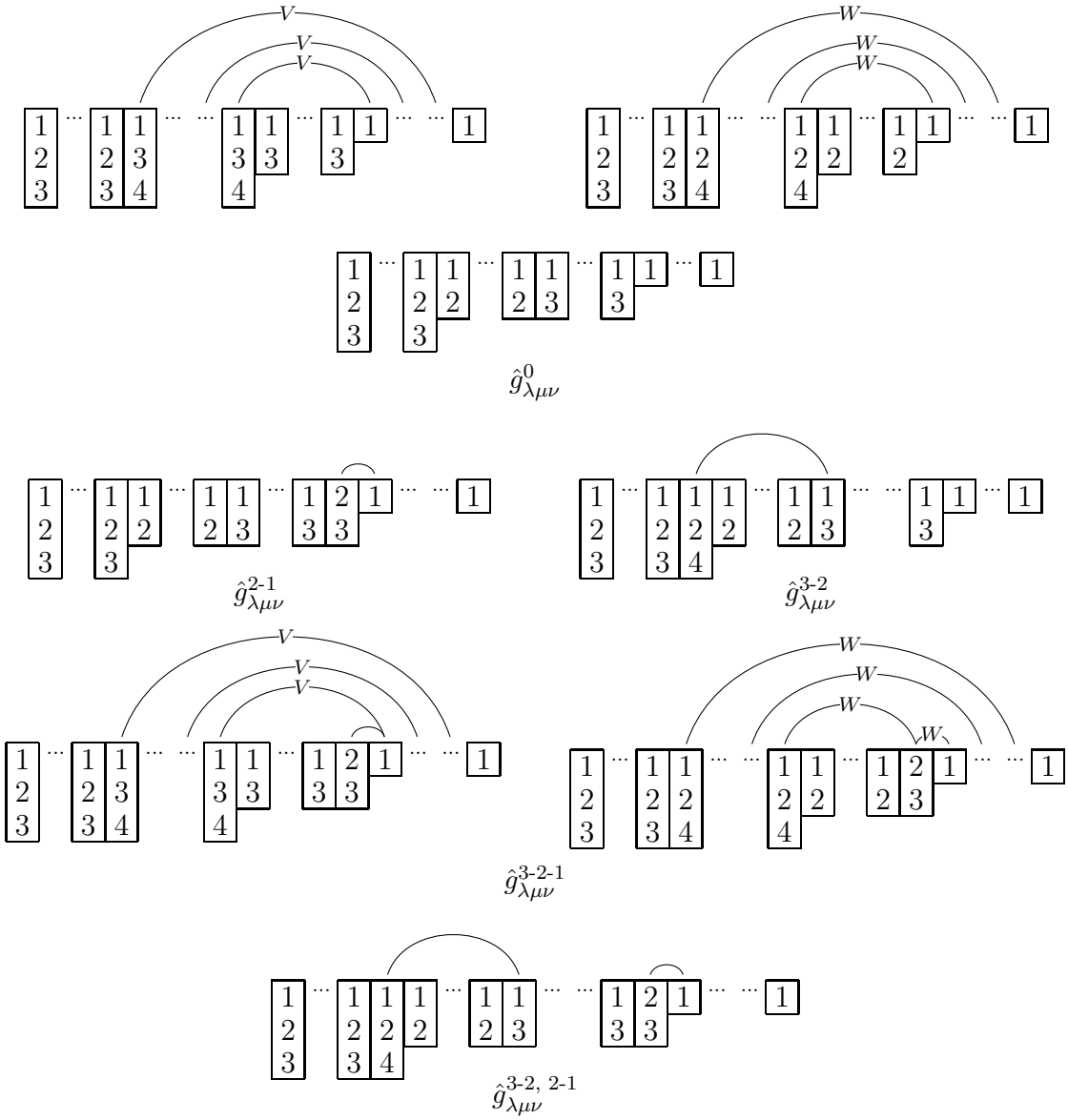

Figure 16: The Kronecker graphical calculus for straightened highest weight invariant-free NST. The labels indicate which type of invariant-free Kronecker coefficient each NST contributes to.

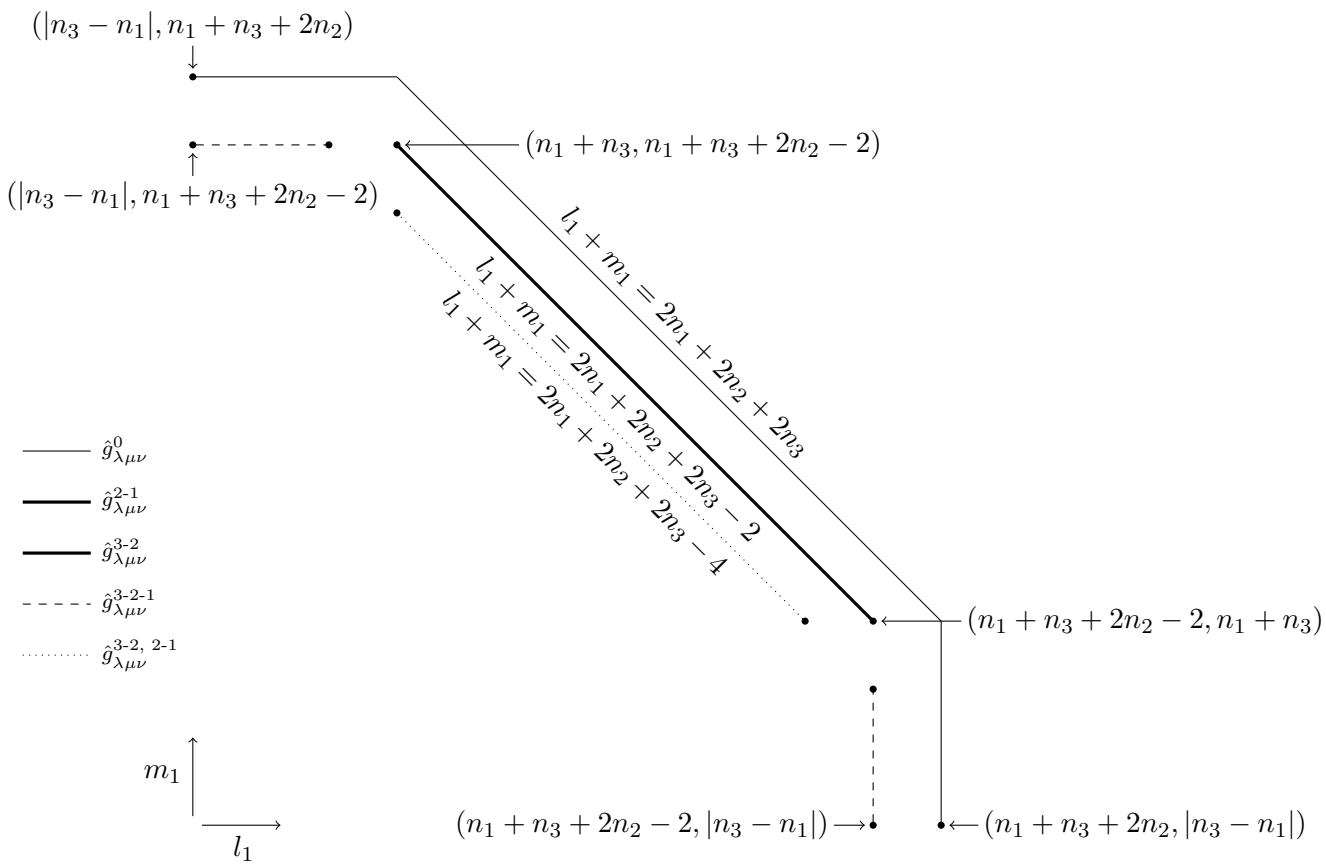

Figure 17: Polytopes for the five types of invariant-free Kronecker coefficients.